Traffic Sensor Network

SD 1210

Members: Jesse Kohn, Bo Gleason, Zach Leyk, Ian Wichmann

Advisors: Bei Gou and Jeff Erickson

Client: Bei Gou

The Problem

- In the US and around the world there many accidents that occur around stop signs.
- Based on the Fatality Analysis Reporting System (FARS) and National Automotive Sampling System-General Estimates System (NASS-GES) data, about 40 percent of the estimated 5,811,000 crashes that occurred in the United States in 2008 were intersection-related crashes.
- According to the National Motor Vehicle Crash Causation Survey, about 31% of intersection related accidents occurred with at least one stop sign present.

Project Introduction

- Driving a motorized vehicle is one of the most dangerous activities that most of us perform on a daily basis
- Our project aims to make city roads a safer place by providing useful data about motor vehicles to a given client
- Example: Collected data given to local police department

The Problem Cont…

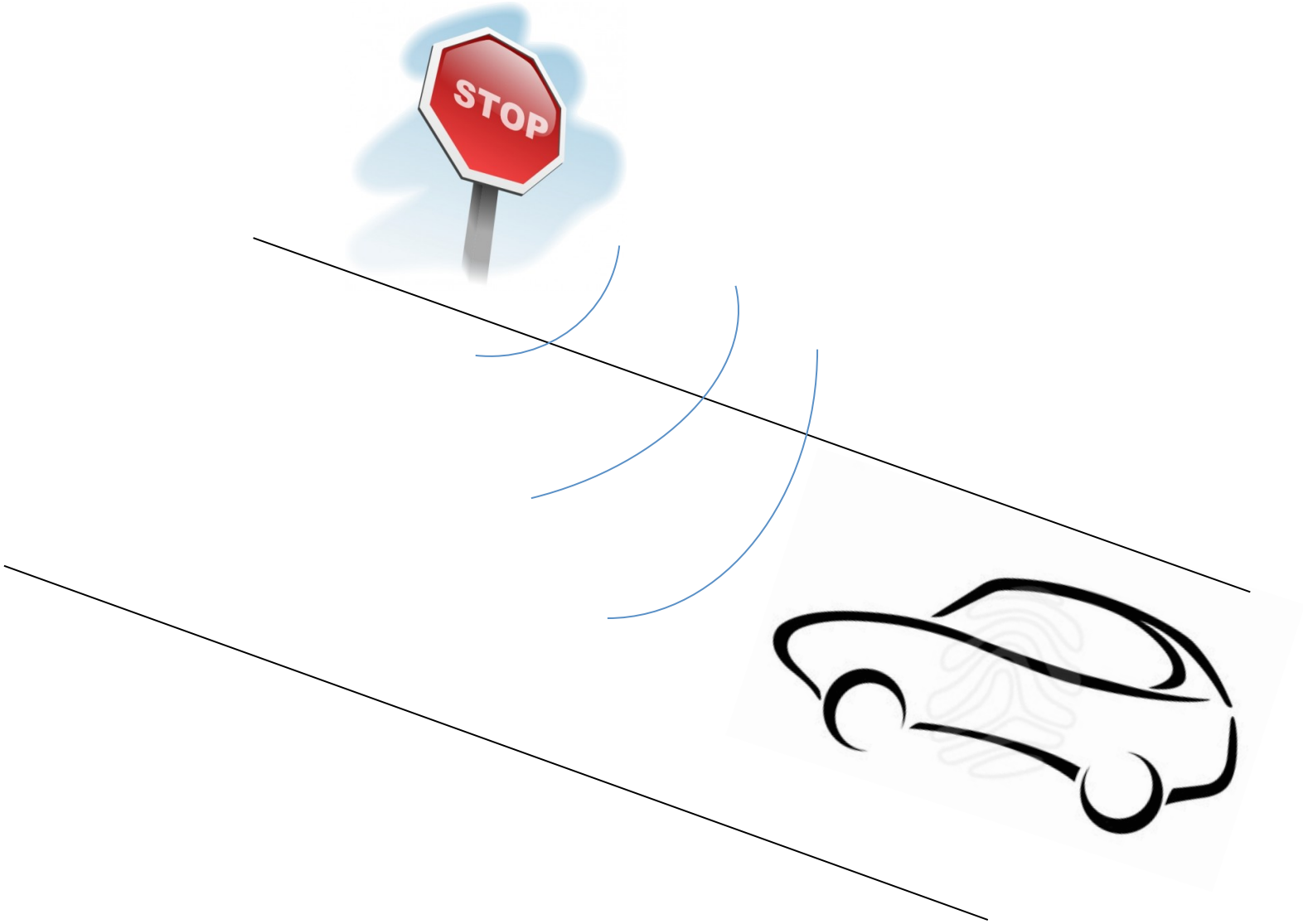

The Problem Cont.

Communication…

"Central Sign"
Located at D and
"Radial Signs"
located at B and C

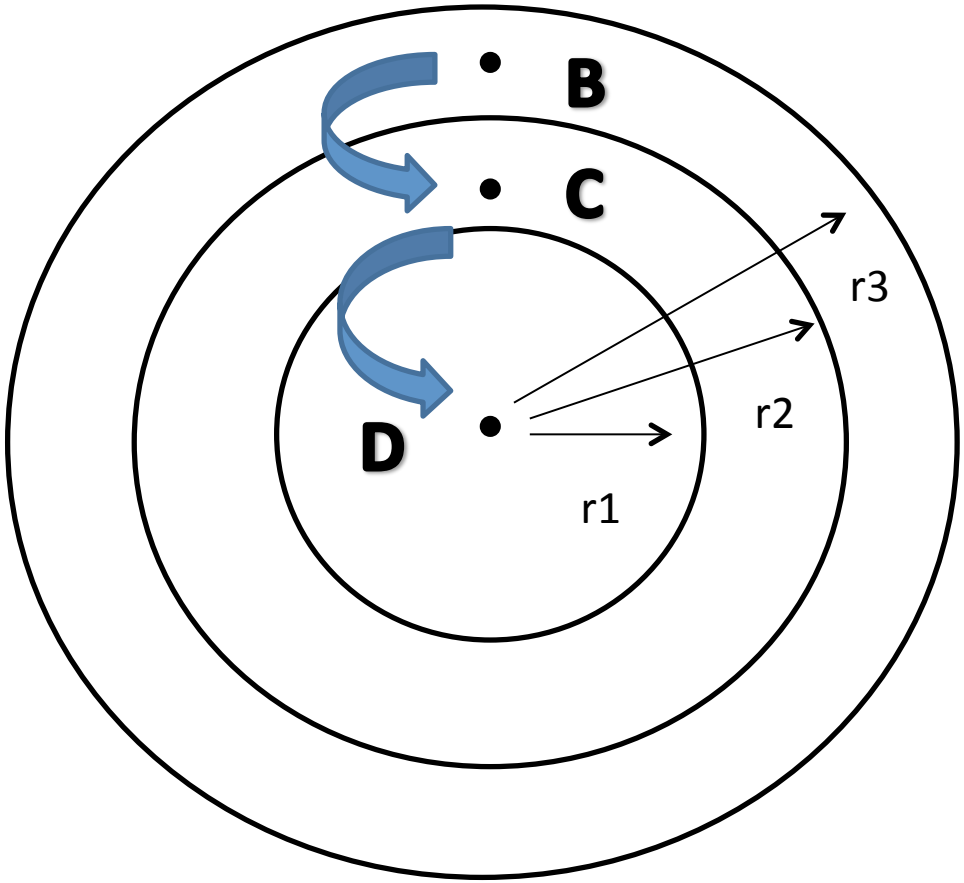

The Main Idea

- Have two stop signs capable of communicating to show proof of the concept described in the previous slides
- One sign will represent the “radial stop sign” and the other will be the “central stop sign”

Client/Advisor Requirements

- Top Priority Requirements
  - The stop sign system will record the number of vehicles that have passed
  - The system will make a reasonable estimate if a given vehicle stops or not
  - The system will record the speed of a vehicle if it is estimated that a vehicle did not stop
  - Radial stop sign will send its data to the central stop sign
  - The “central sign” will not only record its own data, but also store the data received from the other stop signs
  - The system should have a simple and economical design

Client/Advisor Requirements Cont.

- Additional Requirements
  - The speed of the automobile is saved for use by city officials i.e. the police department
  - Integrate a solar panel to charge the battery

Sunforce Amorphous Solar Panel

- 15 W max power
- Rated current 1A
- Typical VI curve in varying light level
- Solar Panel VI curve from test

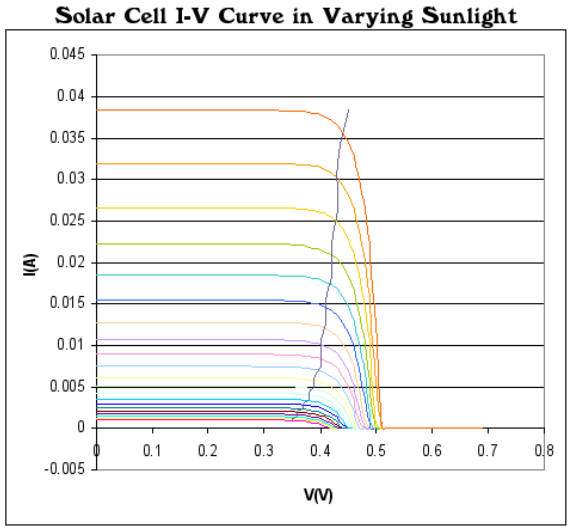

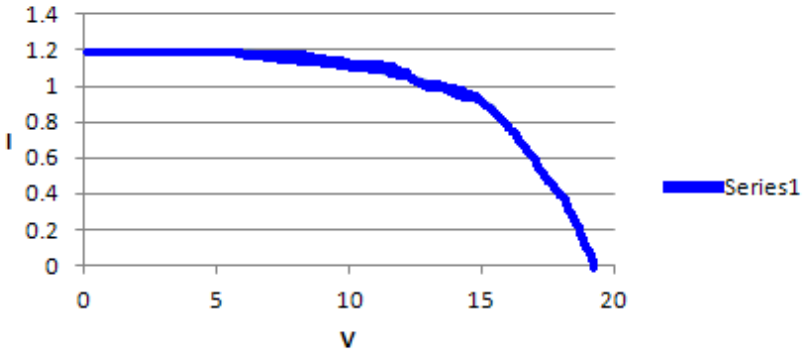

Powering our circuit

- Solar panel charges battery
- Battery voltage stepped down to power system loads

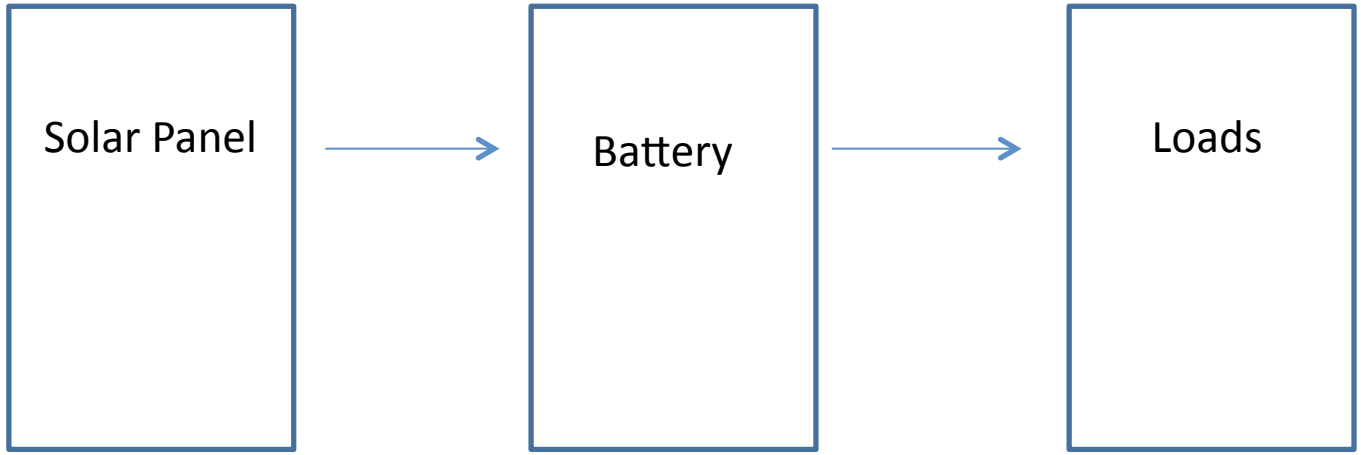

System loads

- Main loads from battery include GPS, transceiver, sensor and microprocessor
- GPS 90mA current draw then 40-60mA draw once signal is found
- Transceiver 210mA max current draw
- Microprocessor 1-5mA draw depending on clock frequency
- Sensor 8ma average current draw

Buck Converter (MC33063)

$$|V_{out}| = 1.25\left(1 + \frac{R2}{R1}\right)$$

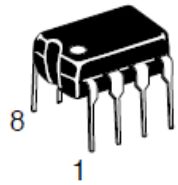

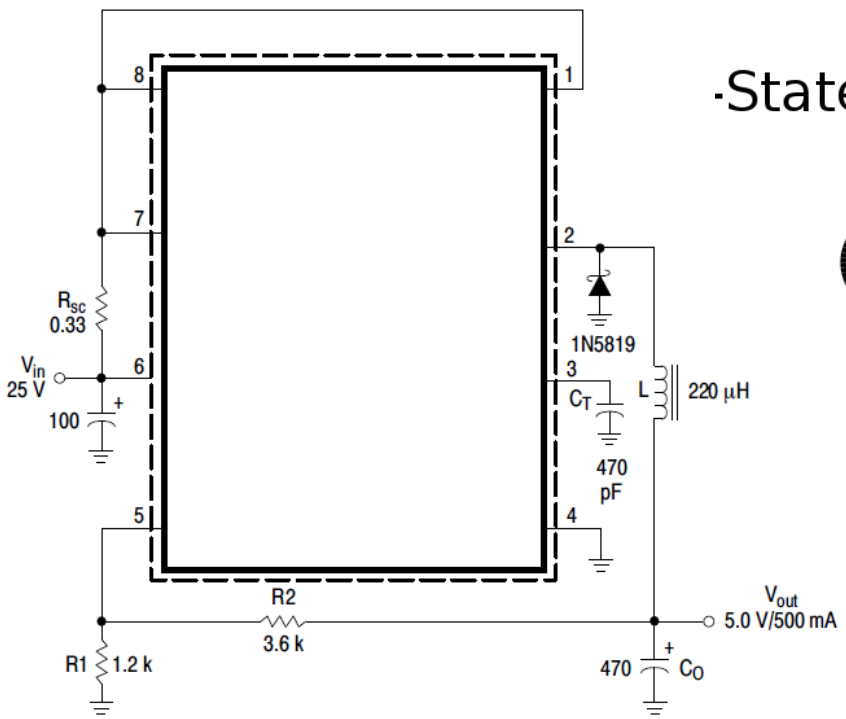

·State

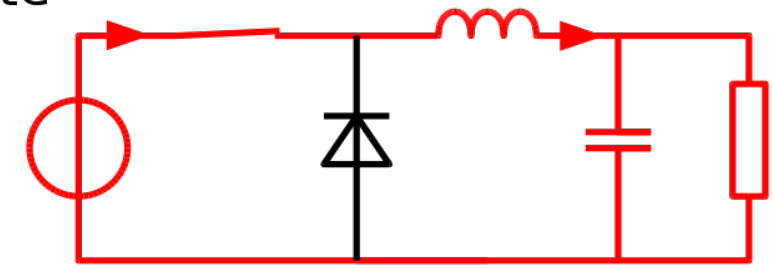

·State

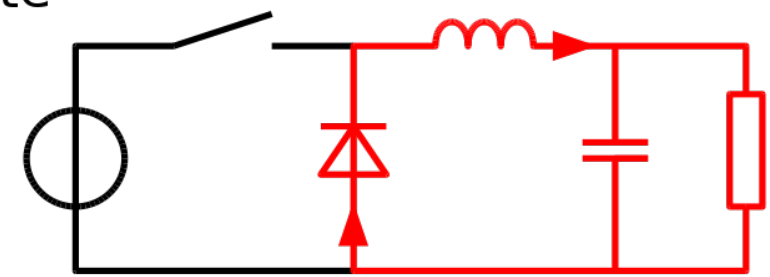

Power circuit

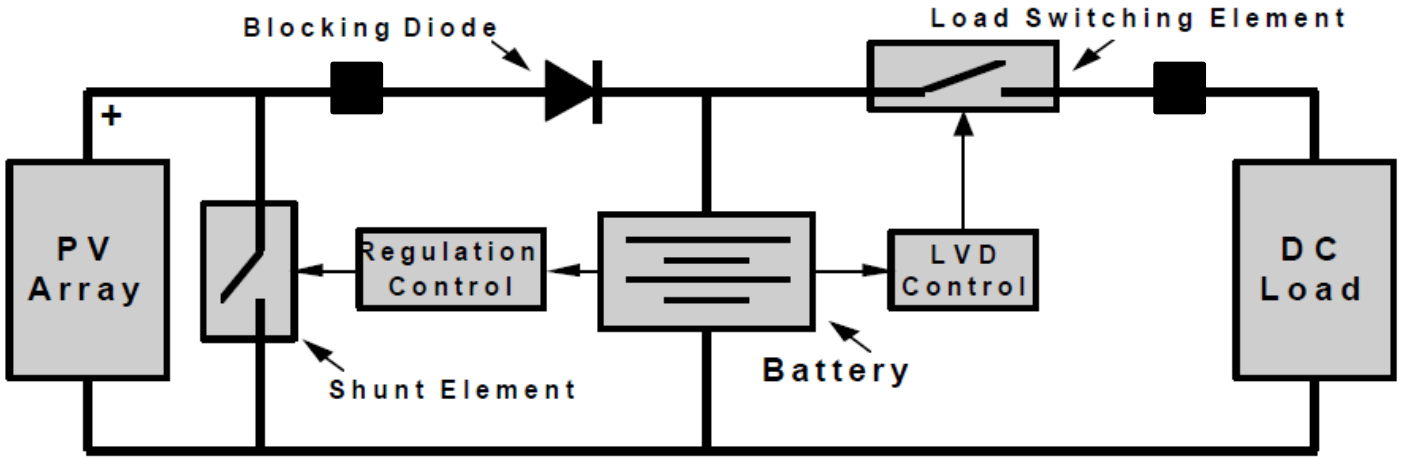

Current limiting fuse

Battery Overvoltage

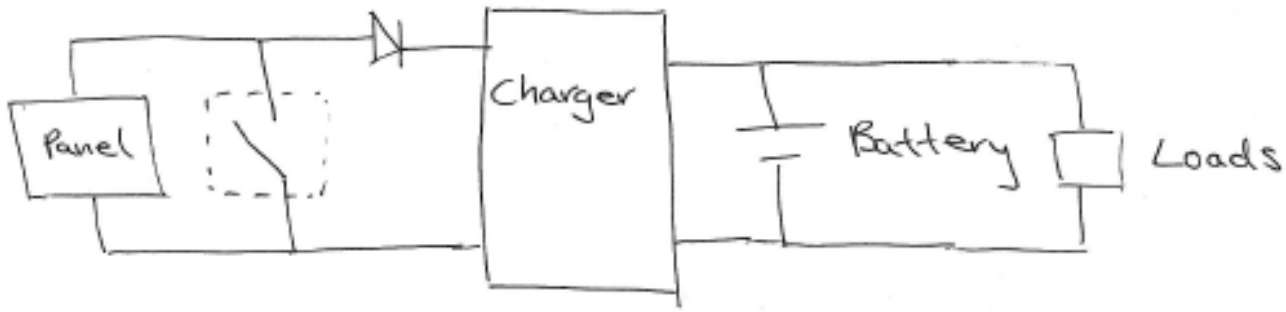

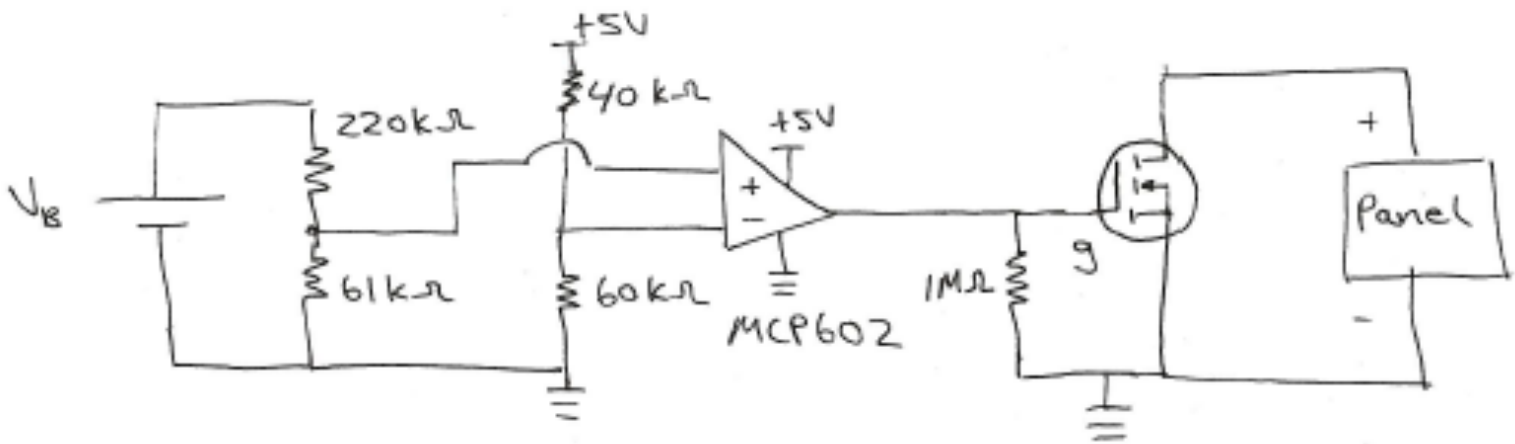

MMPT buck converter IC (LT3652)

- IC provides maximum power point tracking (MPPT) over a small preselected range
- Only comes in a surface mount package so breadboarding required purchasing an adapter board
- Current up 2A can be externally programmed

Programming Battery Charger

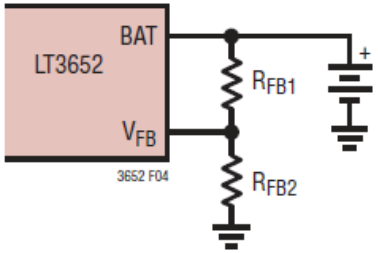

Figure 4. Feedback Resistors from BAT to V_{FB} Program Float Voltage

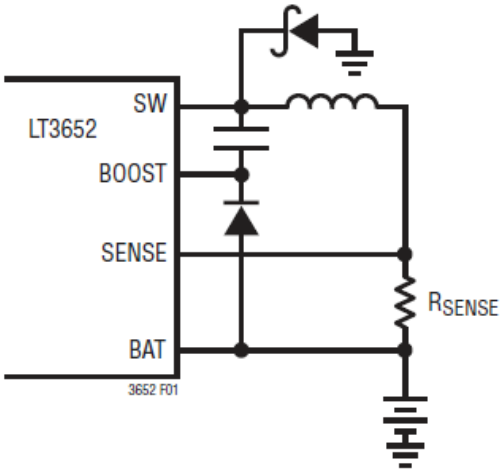

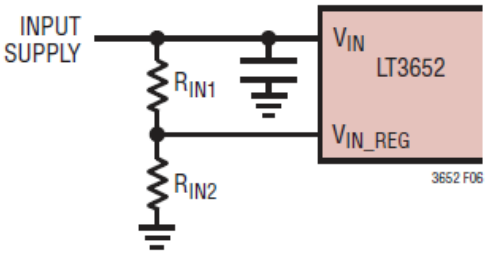

Figure 6. Resistor Divider Sets Minimum V_{IN}

Sensor

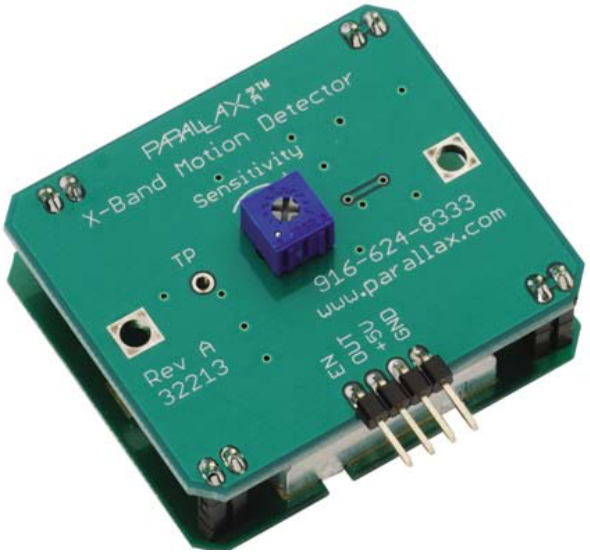

- X-Band motion detector
- Operation frequency of

  10.525 GHz
- Able to detect motion from

  8 to approximately 30 feet
- Adjustable sensitivity potentiometer on back
- Built for Propeller microcontroller series, with 3.3 V output

Sensor

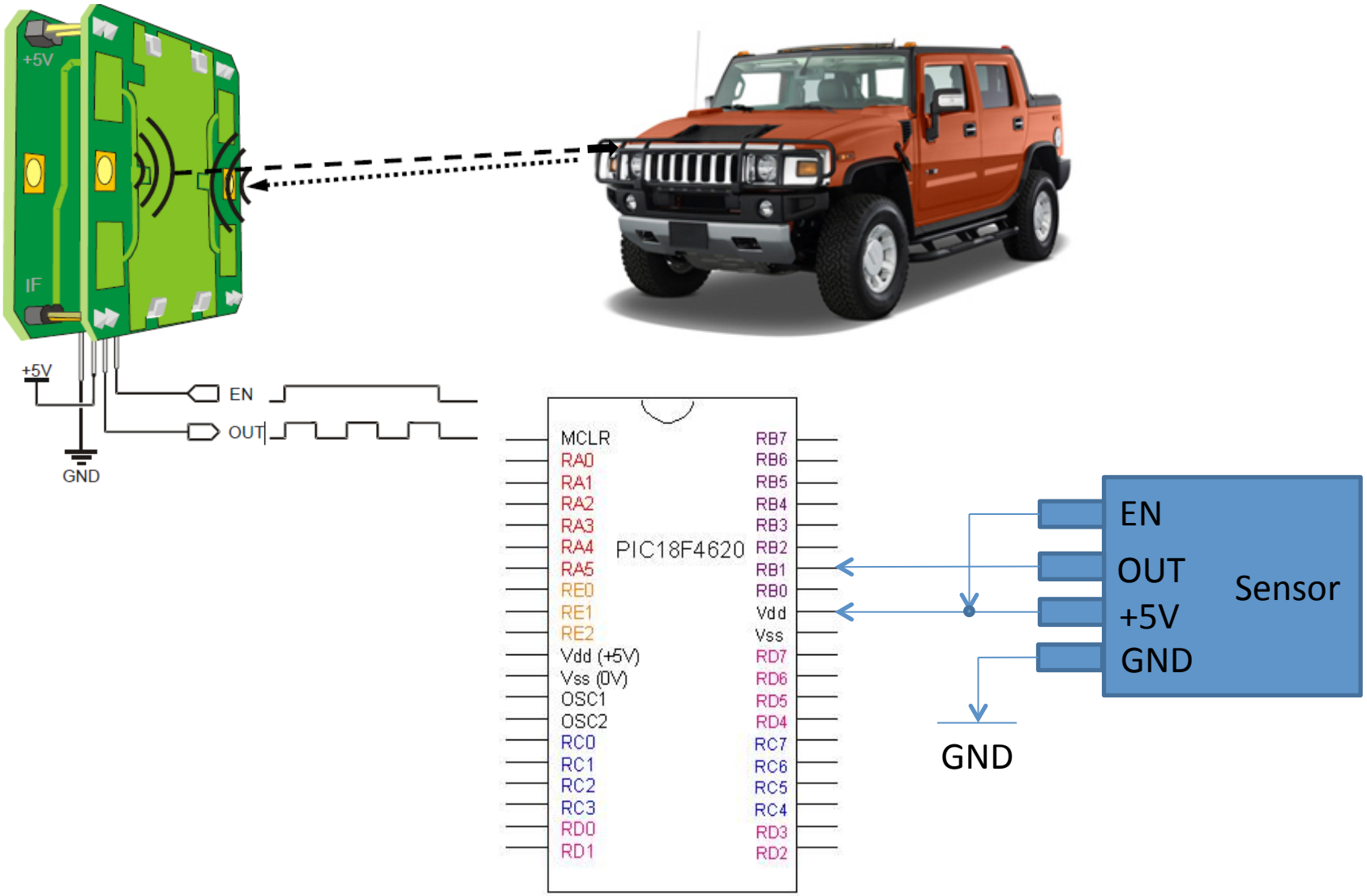
+5V
IF
+5V
GND
EN
OUT
MCLR
RA0
RA1
RA2
RA3
RA4
RA5
RE0
RE1
RE2
Vdd (+5V)
Vss (0V)
OSC1
OSC2
RC0
RC1
RC2
RC3
RD0
RD1
PIC18F4620
RB7
RB6
RB5
RB4
RB3
RB2
RB1
RB0
Vdd
Vss
RD7
RD6
RD5
RD4
RC7
RC6
RC5
RC4
RD3
RD2
EN
OUT
+5V
GND
Sensor
GND

Sensor

- Output of the sensor is called the Doppler Frequency
- The Doppler Frequency is proportional to the speed of an object moving thorough the sensors magnetic field

$$F_d = 2V\left(\frac{F_t}{c}\right)\mathrm{Cos}\,\theta$$

Where

F_d = Doppler frequency
V = Velocity of the target
F_t = Transmit frequency
c = Speed of light (3×10^8 m/sec)
θ = The angle between the target moving direction and the axis of the module.

Sensor

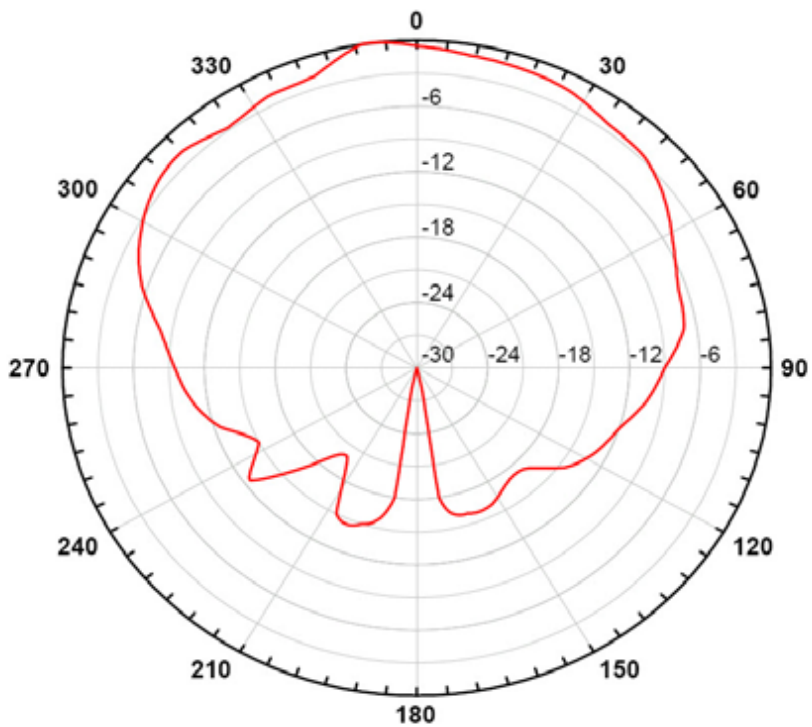

- This image shows the horizontal sensitivity vs. angle chart for our sensor
- 0° is considered straight in front of the sensor

Sensor

- For simplicity and understanding, this is a graph of the Doppler Frequency VS velocity of target
- In this graph, it is estimated that the target is moving straight towards the sensor so the equation can be simplified to the following:

$$F_d = 2V\left(\frac{F_t}{c}\right)$$

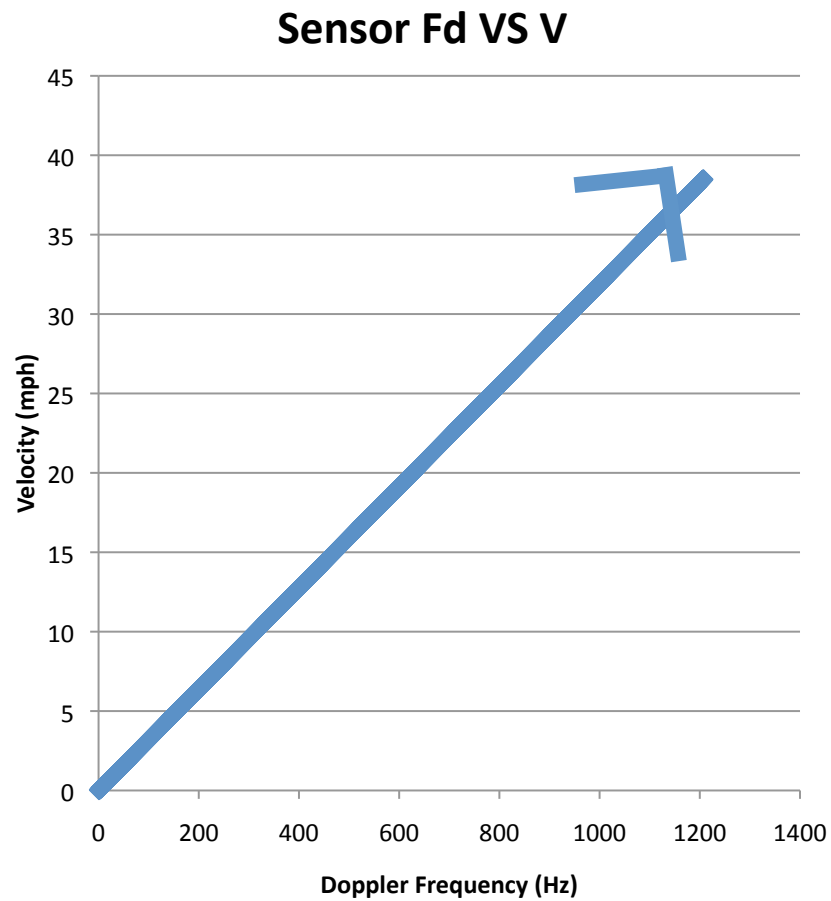

Sensor

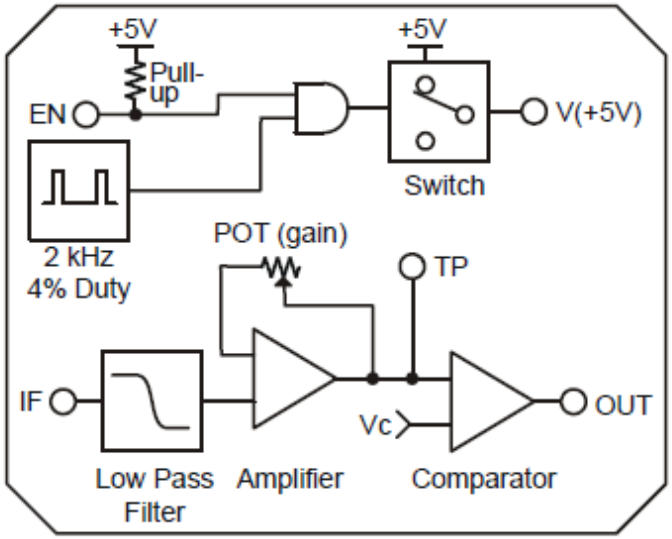

Control Board

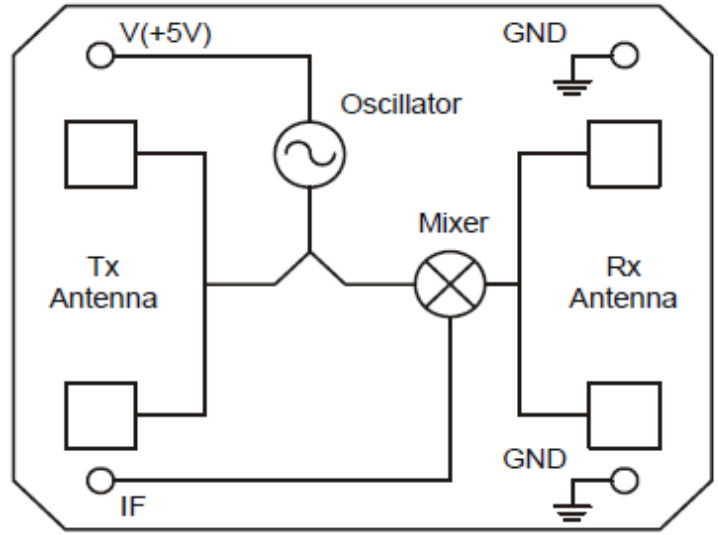

Antenna PCB

The sensor is designed for a microcontroller that takes 3.3 V inputs, but the PIC requires 5 V inputs, so a non-inverting amplifier is used. To get a gain of 5/3, I used R1=300 KΩ and R2=200 KΩ

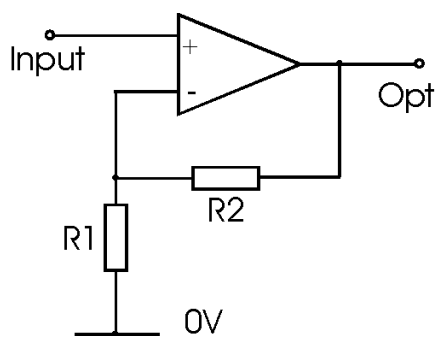

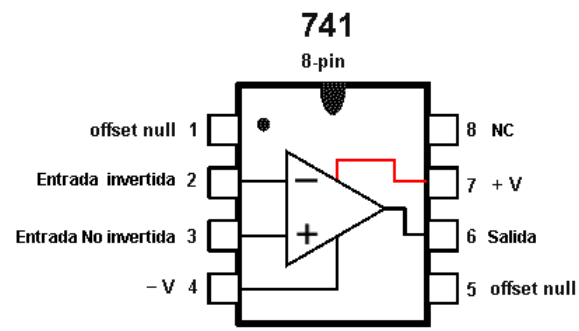

Sensor

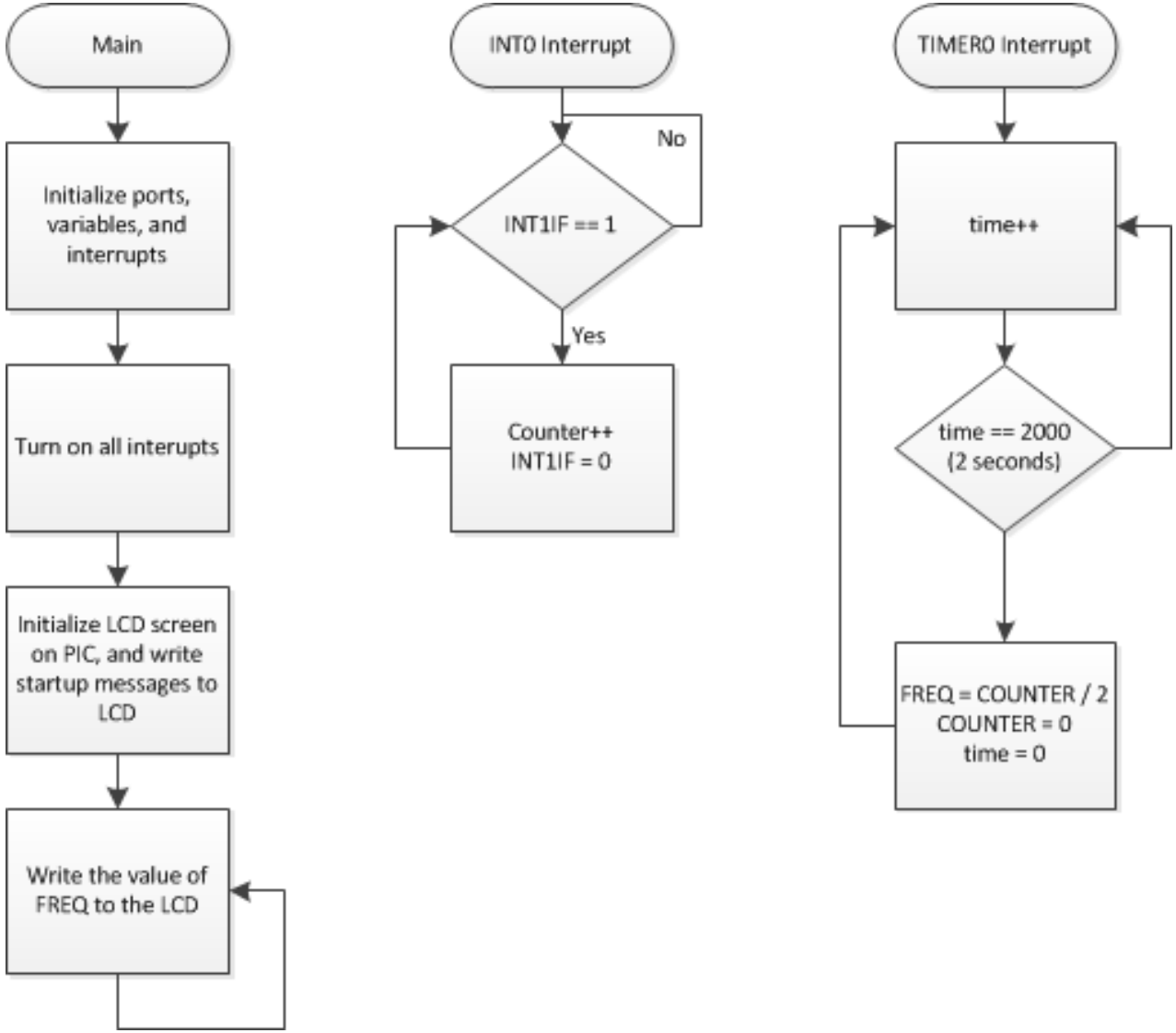
Main
Initialize ports, variables, and interrupts
Turn on all interupts
Initialize LCD screen on PIC, and write startup messages to LCD
Write the value of FREQ to the LCD
INT0 Interrupt
No
INT1IF == 1
Yes
Counter++
INT1IF = 0
TIMER0 Interrupt
time++
time == 2000
(2 seconds)
FREQ = COUNTER / 2
COUNTER = 0
time = 0

GPS

- Venus638FLPx GPS module from Sparkfun Electronics
- Cheap and easy to use
- Used to get accurate date and time

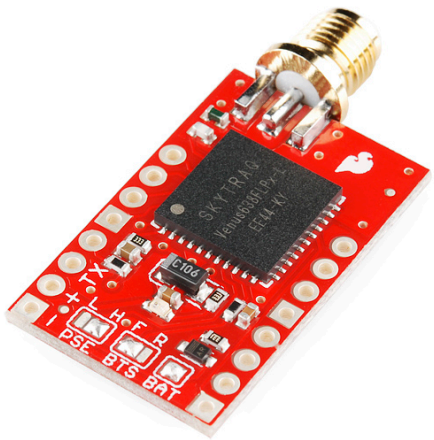

$GPGGA,021902.277,4653.6813,N,09648.1185,W,1,06,1.9,281.5,M,-25.5,M,,0000*6D
$GPGSA,A,3,11,01,31,32,22,20,,,,,,,3.3,1.9,2.7*3F
$GPGSV,3,1,11,14,59,062,16,31,56,195,42,32,44,303,22,22,40,138,23*75
$GPGSV,3,2,11,01,35,287,35,25,30,091,21,11,24,264,41,12,21,052,26*7B
$GPGSV,3,3,11,20,14,308,28,18,04,132,,17,00,341,*42
$GPRMC,021902.277,A,4653.6813,N,09648.1185,W,0000.0,081.0,031212,,,A*4A
$GPVTG,081.0,T,,M,0000.0,N,00000.0,K,A*34

GPS

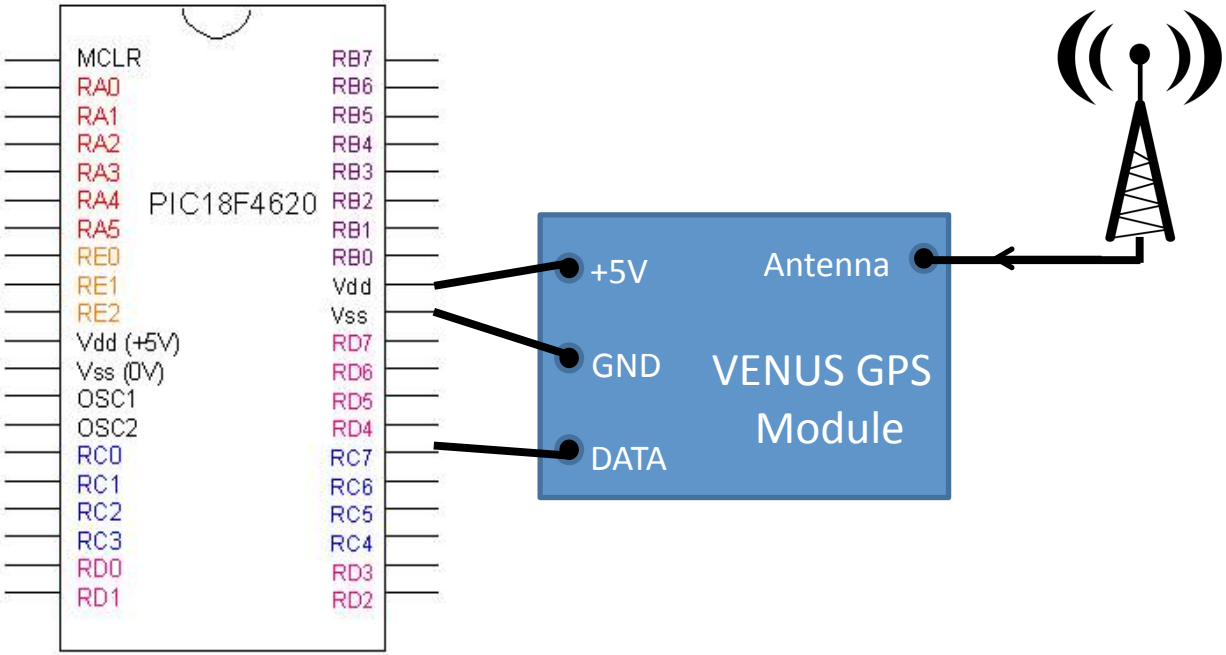
MCLR
RA0
RA1
RA2
RA3
RA4
RA5
RE0
RE1
RE2
Vdd (+5V)
Vss (0V)
OSC1
OSC2
RC0
RC1
RC2
RC3
RD0
RD1
PIC18F4620
RB7
RB6
RB5
RB4
RB3
RB2
RB1
RB0
Vdd
Vss
RD7
RD6
RD5
RD4
RC7
RC6
RC5
RC4
RD3
RD2
+5V
GND
DATA
Antenna
VENUS GPS
Module

GPS

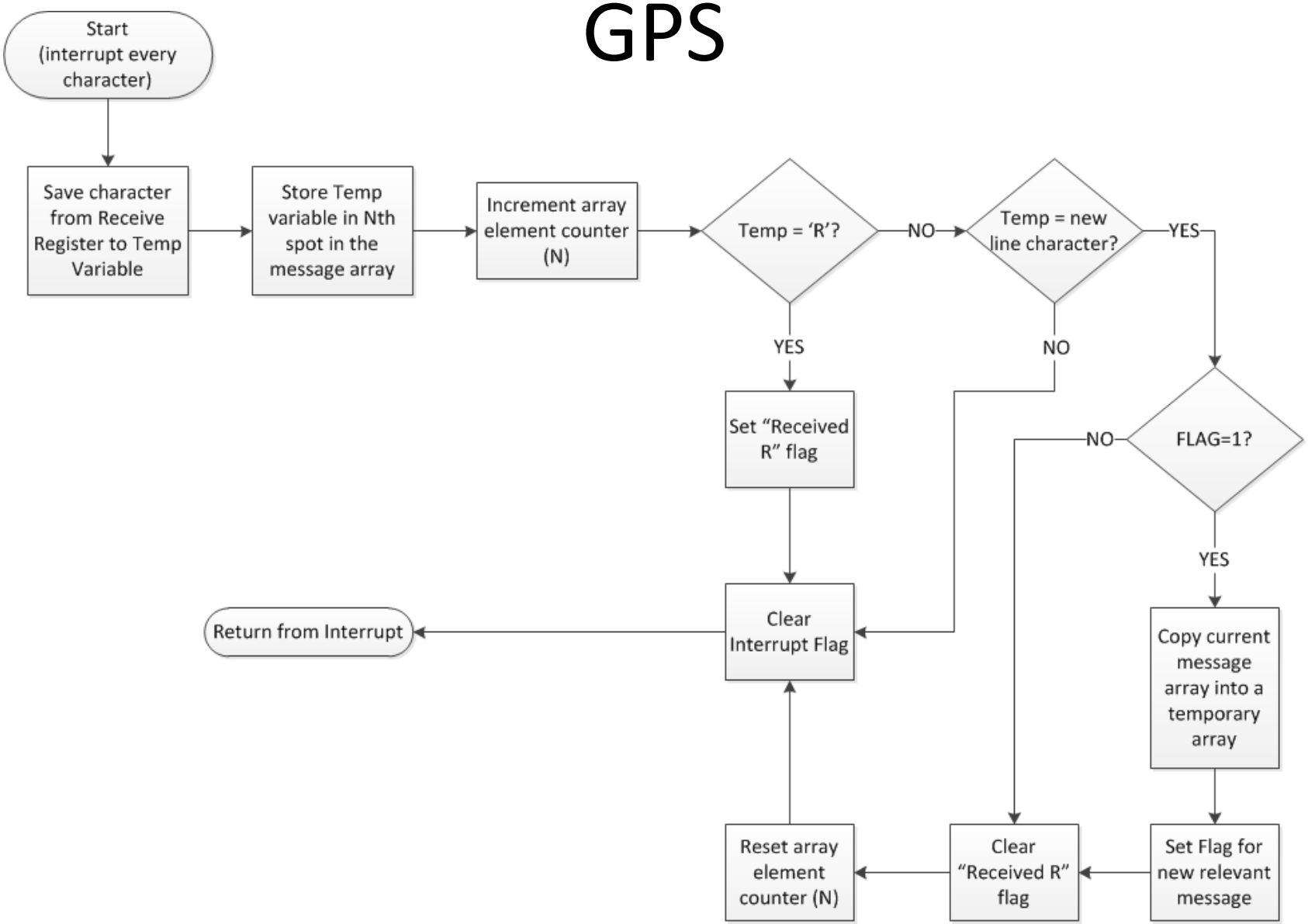
Start (interrupt every character)
Save character from Receive Register to Temp Variable
Store Temp variable in Nth spot in the message array
Increment array element counter (N)
Temp = 'R'?
NO
Temp = new line character?
YES
YES
NO
Set "Received R" flag
NO
FLAG=1?
YES
Return from Interrupt
Clear Interrupt Flag
Copy current message array into a temporary array
Reset array element counter (N)
Clear "Received R" flag
Set Flag for new relevant message

Transceivers

- Xbee Pro 900 RF module from Sparkfun Electronics
- Inexpensive, long range, and easy to use
- Used to transmit/receive data between stop signs

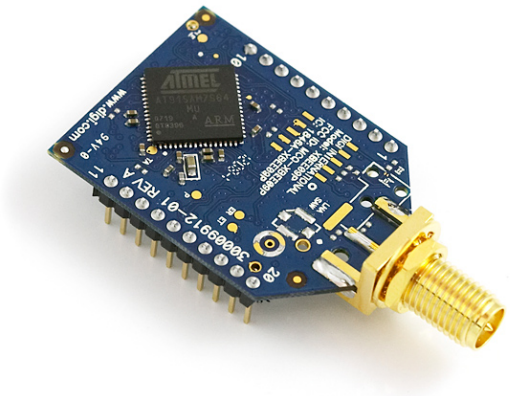

Transceivers

- Currently in process of figuring out how the transceivers transmit and receive data
- Message format:

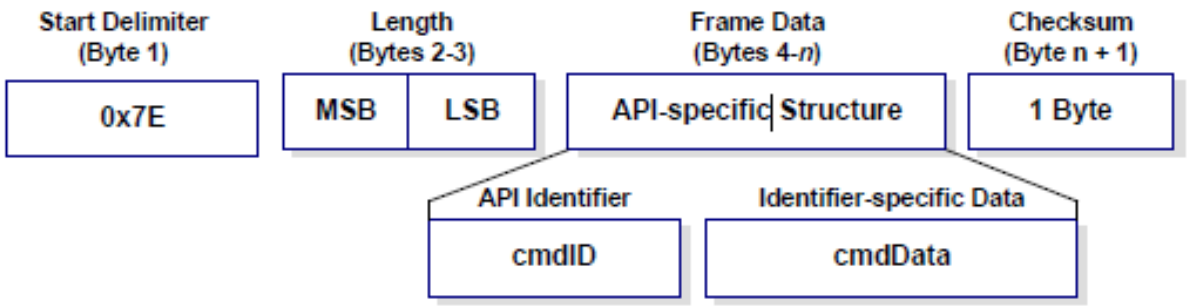

- Can access AT command mode
  - Used to view and modify RF module parameters

Data Storage

- Two Types:
  - Electrically Erasable Programmable Read-Only Memory (EEPROM)
  - Secure Digital (SD) using OpenLog Data Logger
- Cheap, non-volatile data storage
- Used to store data

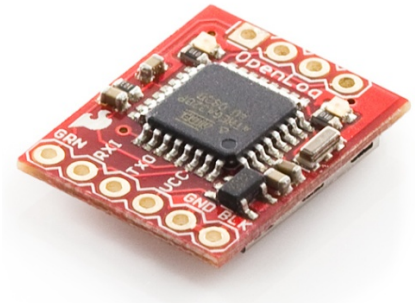

How They Work Together

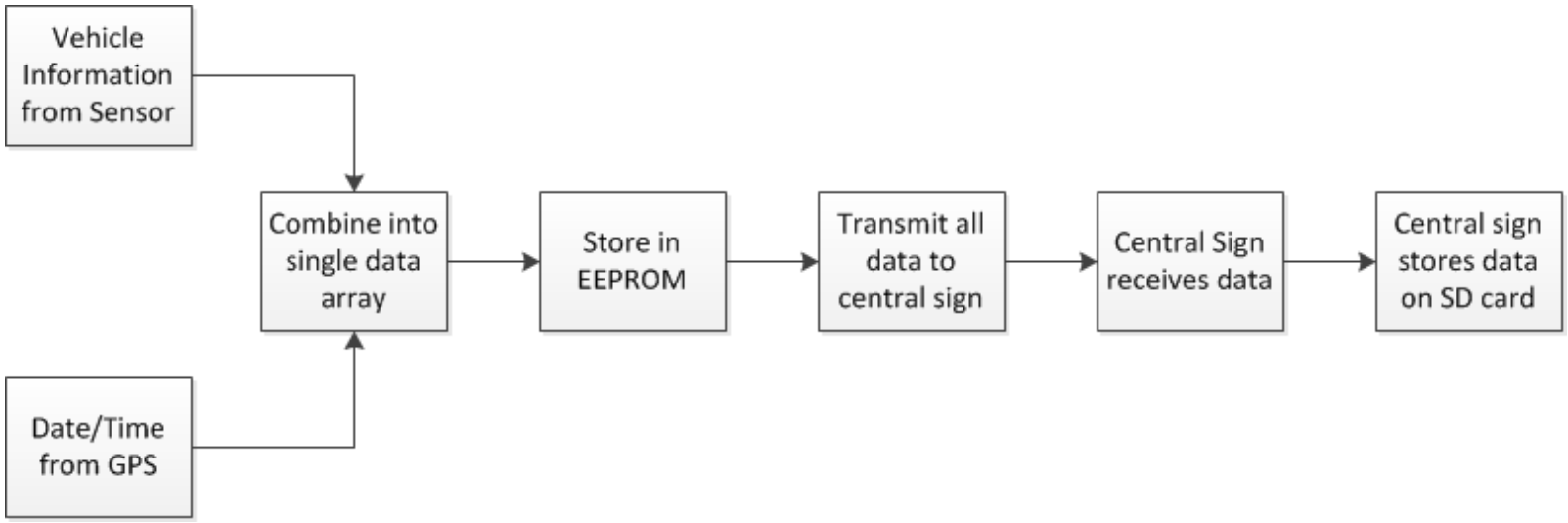

[data array]=[Date, Time, Speed, Stop?, Car #]

Example: [120612,102055,12.5,N,1345]

Project Status

- Currently date, time, latitude and longitude can be read from GPS

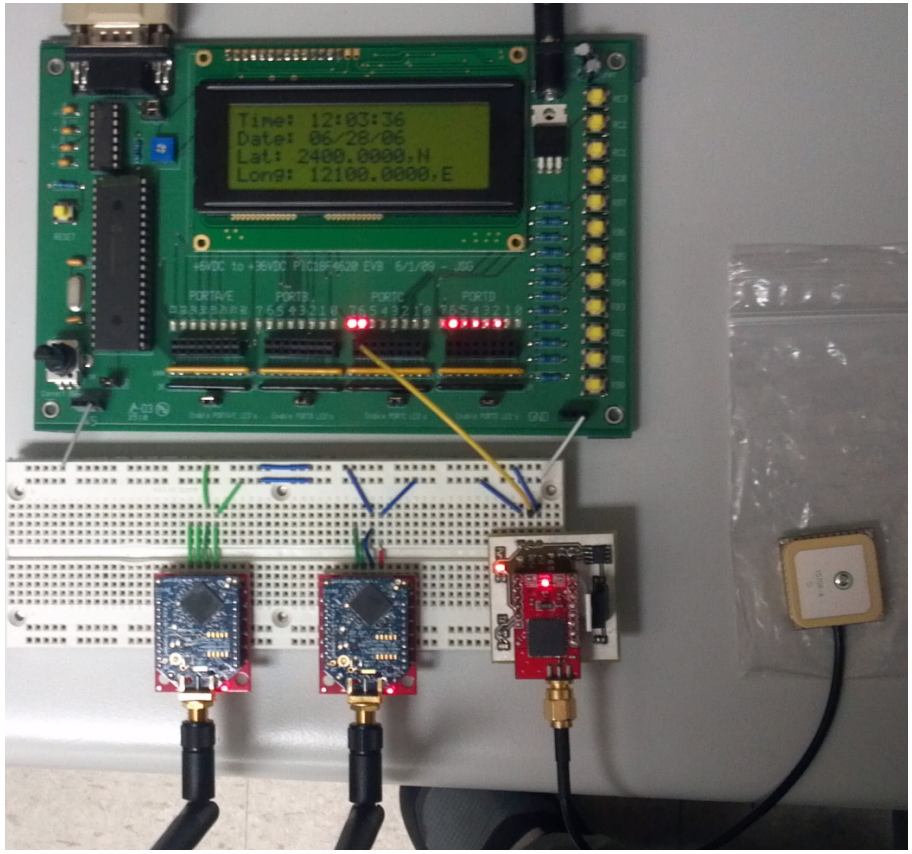

Project Status

- Buck converter circuit successfully steps down around 12V from the battery to 5V for loads

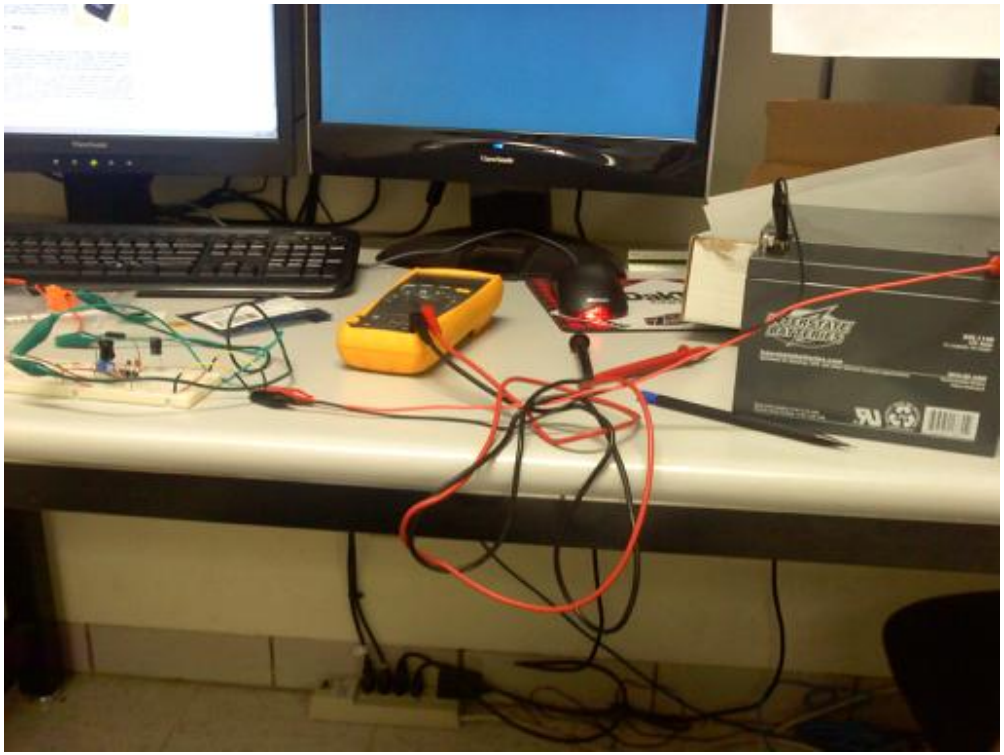

Project Status

- Interfaced X-band sensor with the PIC microprocessor

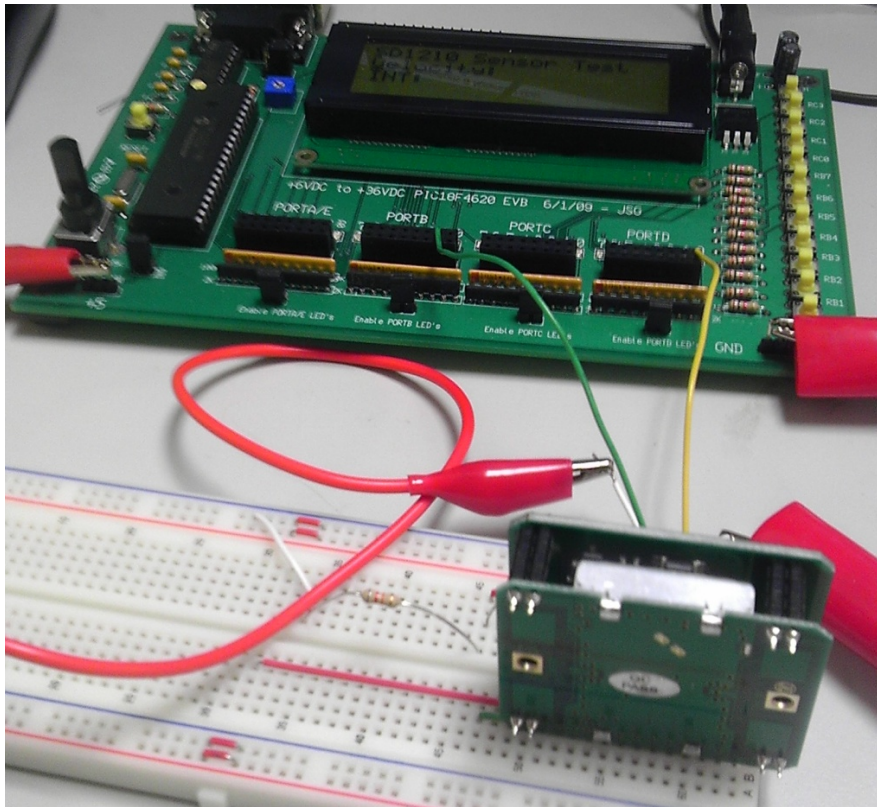

Project Status

- Breadboarded battery charging IC allowing solar panel to charge the lead acid battery

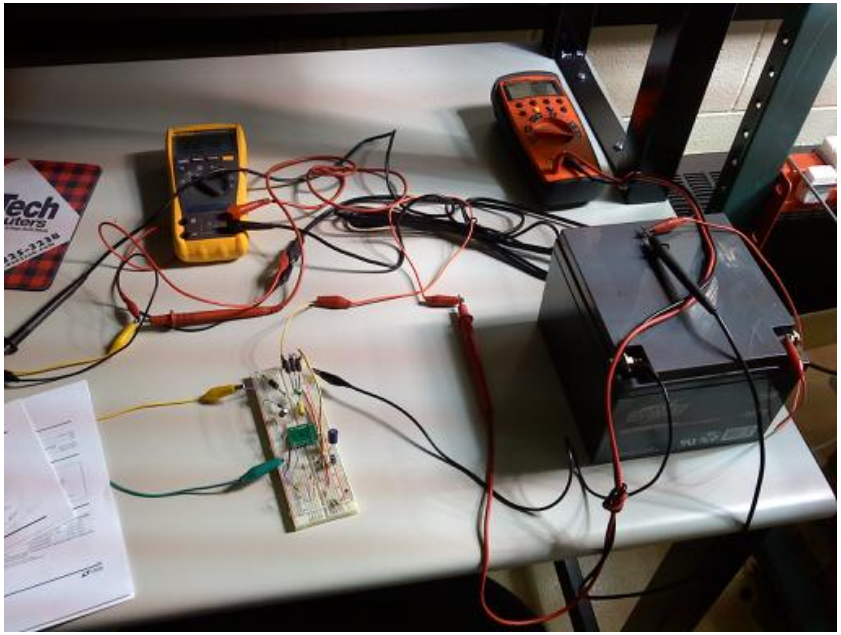

Yet to accomplish

- In progress of transmitting data from one transceiver module to the other
- Successfully store data to the EEPROM and data logger
- Get battery charging IC to operate near full current rating
- Using X-bad sensor Doppler frequency readings to accurately detect velocity and deceleration of vehicles

Semester 1			
Task #	Task Description	Week	Who?
1	Requirements Capture Meeting	4	All
2	Requirements Capture Document:	5,6	All
3	Design Options Considered>>Intro, Summary, Timeline/Gantt Chart	5,6	Zach
4	Design Options Considered>>Previous Work	5,6	Jesse
5	Design Options Considered>>Budget	5,6	Ian, Bo
6	Design Options Considered	5,6	All
7	Requirements Capture Finalized	7	All
8	Researched parts and discussed with Jeff procedure for ordering through the department	8	All
9	Submitted updated budget to Dr. Schroeder due to recent requirement changes	9	All
10	Order Parts	9	Bo, Jesse
11	Power requirements for GPS and transmitter	10	Zach
12	Characterized solar panels	10	Zach
13	Programming PIC for GPS	10,11,12	Bo, Jesse
14	Begin work with Voltage Regulators	11	Zach
15	Ordered battery charging IC	11	Zach
16	Ordered sensor	11	Ian, Zach
17	Breadboard Voltage Regulator	12	Zach
18	Tested voltage regulator with GPS and transceiver	12	Zach
19	Talked to Glower to discuss EEPROM	13	Bo, Jesse
20	Reflowed Battery Charging IC and began breadboarding	13	Zach
21	Wrote Progress Report and had meeting with Dr. Schroeder	13	All
22	Calculated Component values for battery charging IC and finished breadboarding	14	Zach
23	Successfully read data from GPS and parsed it	15	Bo, Jesse
24	Worked on transceivers	15,16	Bo, Jesse
25	Ran tests for battery charging from solar panel	15	Zach
26	Powered up sensor	15	Ian
27	Began interfacing PIC and Sensor	16	Ian
28	Worked on Design 2 presentation	16	All

Semester 1	
Reference	
Week 1	Aug. 20-25
Week 2	Aug. 27-Sept 1
Week 3	Sept. 2-8
Week 4	Sept. 9-15
Week 5	Sept. 16-22
Week 6	Sept. 23-29
Week 7	Sept. 30-Oct. 6
Week 8	Oct. 7-13
Week 9	Oct. 14-20
Week 10	Oct. 21-27
Week 11	Oct. 28-Nov. 3
Week 12	Nov. 4-10
Week 13	Nov. 11-17
Week 14	Nov. 18-24
Week 15	Nov. 25-Dec.1
Week 16	Dec. 2-8
Finals	Dec. 9-15

Semester 2			
Task #	Task Description	Week	Who?
1	Successfully transmit/receive data with transceivers	1,2,3	Jesse, Bo
2	Begin using PIC for charge control and MPPT	1,2	Zach
3	Calculate speed and acceleration with PIC/Sensor	1,2	Ian
4	Design circuit to interface PIC with EEPROM	2	Jesse
5	Begin storing data on EEPROM and Datalogger	3,4	Bo, Jesse
6	Testing accuracy of speed and acceleration calculated from PIC	3,4	Ian
7	Write code and design harware for A/D D/A conversions with PIC	3,4	Zach
8	Assemble stop sign (purchase bucket, rocks, sheet metal, sign post)	5,6,7	Zach
9	Incorporating speed and acceleration data with date and time	5	Ian, Bo, Jesse
10	Breadboard PIC for verification of design before PCB layout	5	All
11	Work on PCB layout	6,7	Bo, Jesse
12	Order PCB	8	Bo
13	Testing MPPT with solar panel and battery	8,9	Zach
14	Purchase and assemble enclosure boxes for system components	8,9	Ian
15	Testing to make sure all the data is transmitting correctly	8,9	Bo, Jesse
16	Begin system assembly	10	All
17	Begin outdoor testing of system as a whole	11,12,13,14	All
18	Compile data collected from testing for troubleshooting	15	All
19	Finalize system, prepare for presentation	16	All
20	Presentation/Demo	15,16	All
21	Finals	17	All

Semester 2	
Reference	
Week 1	Jan. 6-12
Week 2	Jan. 13-19
Week 3	Jan. 20-26
Week 4	Jan. 27- Feb. 2
Week 5	Feb. 3-9
Week 6	Feb. 10-16
Week 7	Feb. 17-23
Week 8	Feb. 24-Mar. 2
Week 9	Mar. 3-9
Week 10	Mar. 10-16
Week 11	Mar. 17-23
Week 12	Mar. 24-30
Week 13	Mar. 31-Apr. 6
Week 14	Apr. 7-13
Week 15	Apr. 14-20
Week 16	Apr. 21-27
Week 17	Apr. 28-May 4
Finals	May 5-11

Current Budget Status

Purchases Made:

Part	Quantity	Retail Cost	Acquired Cost	Total Cost
LT 3652 Battery Charger IC	2	$6.53	$6.53	$13.06
DFN-12 to SMT adapter board	1	$22.49	$22.49	$22.49
IC EEPROM 1MBit 20 MHz 8 Dip	2	$4.40	$4.40	$8.80
Xbee Explorer Regulated	2	$9.95	$9.95	$19.90
900 MHz Duck Antenna RP-SMA	2	$7.95	$7.95	$15.90
Xbee Pro 900 RPSMA	2	$54.95	$54.95	$109.90
OpenLog Data Logger	1	$24.95	$24.95	$24.95
Antenna GPS Embedded SMA	2	$11.95	$11.95	$23.90
Venus GPS with SMA Connector	1	$49.95	$49.95	$49.95
X-Band Motion Detector, 10.525 GHz, GH100 Microwave Sensor	1	$34.99	$34.99	$34.99
15-Watt Amorphous Solar Panel	2	$60.00	$0.00	$120.00

Total Spent: $323.84

Allotted Budget: $999.00

Remaining Purchases

Part	Quantity	Retail Cost	Total Cost
PIC 18F4620	2	$7.94	$15.88
Power Sonic 26-Ahr Battery	2	$71.99	$143.98
Electronics Enclosures	1	$50.00	$50.00
X-Band Motion Detector, 10.525 GHz, GH100 Microwave Sensor	1	$34.99	$34.99
Venus GPS with SMA Connector	1	$49.95	$49.95
FTDI Basic Breakout	1	$14.95	$14.95
6-ft U Channel fence post	2	$10.89	$21.78
5 gallon pail	2	$2.60	$5.20
Instant Post Cement	1	$5.99	$5.99
Steel Cold Rolled 20 Gauge Sheet 3ftx3ft	2	$32.96	$65.92
PCB board costs for Microcontrollers	4	$35.00	$140.00

Cost of Future Purchases: $548.64

Total Projected Cost of Traffic Sensor Network: $872.48

Summary

- Project Introduction
- Requirements given by advisor
- Technical Content
- Project Status
- Budget

Thank You For Your Time.

Questions?